三友繼電器 SANYOU RELAYS

WJ31X Series Magnetic Latching Relay

Feature

- 120A switching capability
- Low power consumption,pulse driven operation
- Strong resistance ability to shock and vibration,high reliability
- Dielectric strength 4kv(coil to contacts)
- Long service life
- RoHS compliant
- Tested and approved according to UC3 for IEC62055-31
- Compliant to IEC61810
- Dimensions:42.0mm x 35.0mm x 21.5mm

Contact Capacity

Type	WJ31X
Rated load	120A 250VAC
Max.switching current	120A
Max.switching voltage	277VAC
Max.switching power	33,240VA

General Specification

Contact material	Silver alloy	
Contact resistance	1mΩ Max.	
Operate time	20ms. Max.	
Release time	20ms. Max.	
Insulation resistance(initial)	1,000MΩ Min. (DC500V)	
Dielectric strength	Contact - contact: AC2,000V;50/60Hz 1min	
	Contact - coil: AC4,000V;50/60Hz 1min	
Creepage and dearance distance (coil contact)	8mm	
Vibration resistance	10~55Hz, 1.5mm DA	
Shock resistance	Durability	100G min
	Malfunction	10G min
Expected life	Mechanical life(1800 cycles/Hour)	100,000 cycles
	Electrical life(600 cycles/Hour)	10,000 cycles
Ambient temperature	-40℃~+85℃	
Humidity	5℃~+85%RH	

Coil Data(at 20℃)

standard type

Nominal Voltage (VDC)	Coil Resistance ±10% (Ω)			Min.Set/Reset Voltage(Max) (VDC)	Pulse Duration (ms)	Coil Power
	Single coil	Dual coil				
5	12.5	6.25	6.25	70% nominal voltage	100min	Single/Dual 2.0W/4.0W
6	18	9	9			
9	40.5	20.25	20.25			
12	72	36	36			
24	288	144	144			
48	1152	576	576			

Ordering Information

WJ31X	120A	12	L	2	XXX	

- XXX: Customer special code.
- 2: Coil sort:1-Single coil,2-Dual coil.
- L: Coil type:D-standard type.
- 12: Rated coil voltage(VDC):05,06,09,12,24,48
- 120A: Switching capacity:120A.
- WJ31X: Type: WJ31X,Contact Form:1 Pole

Outline Dimension(Unit:mm)

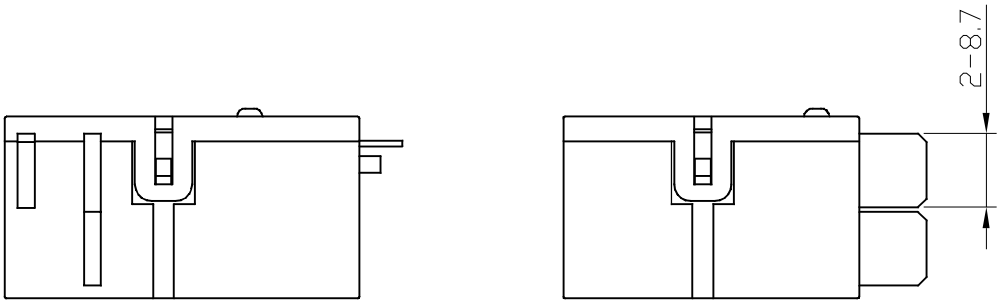

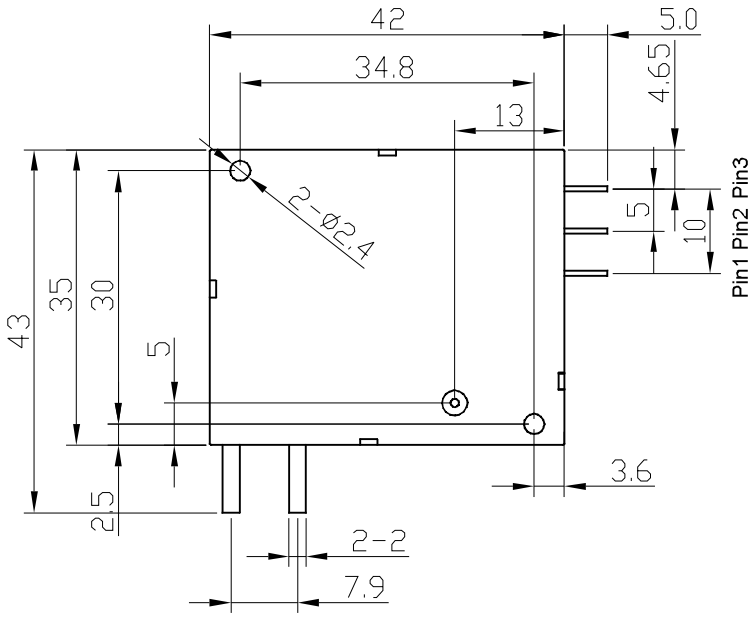

Remark:Unless otherwise specified,
< 1mm: ±0.2mm;
1-5mm: ±0.3mm;
> 5mm: ±0.4mm.

Typical Application

- Energy meter used in smart grid
- Remote control
- Combination switch
- Electrical power

Wiring Diagram

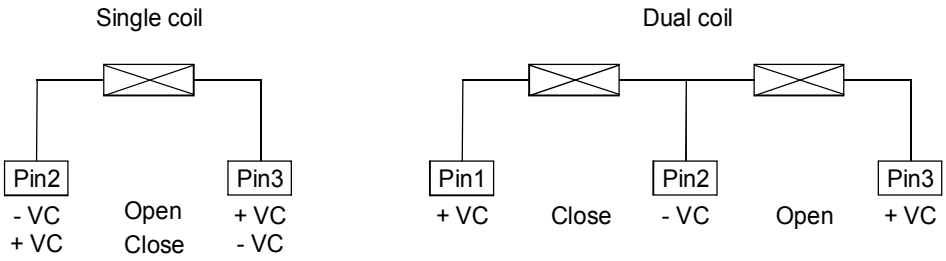

Precautions :

1. The original position of latching relay is "closed" when shipping. It is possible that during transit or installation, the relay may change its state to be "open" position, it is recommended to set the relay in to state needed via apply voltage to the coil.
2. In order to let relay operate normally, the voltage which apply to the coil should reach to the rated voltage, the pulse width should be 50ms to 100ms; Do not energize both coil at the same time on Dual coil or energize the coil for longer than 1 minute.
3. Relay without copper wire, the terminal can not be soldered, bend, and rigid fasten both two terminals;
4. Keep away from corrosive gas and other condition which may damage the relay.